3MX6M

Canopy top

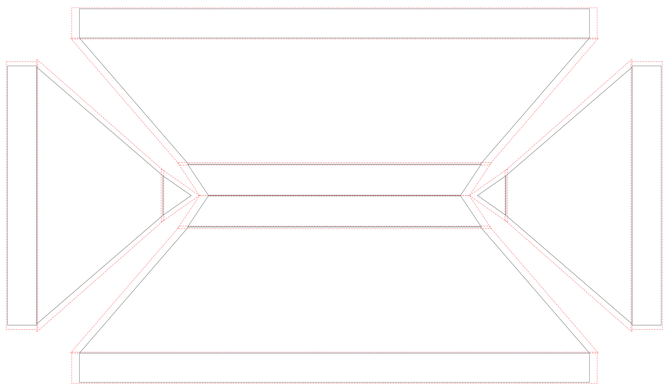

Inside half side wall-right

Outside half side wall-right

Inside half side wall-left

Outside half side wall-left

Inside full back wall

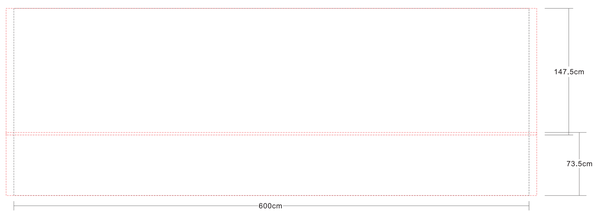
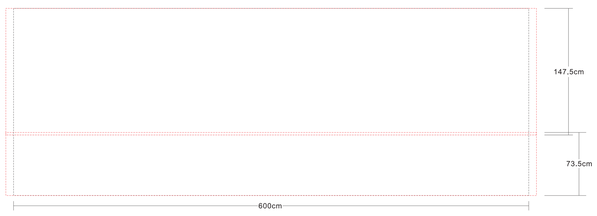
Outside full back wall