120mm SEG Storage Lightbox Counter R2 EM-08FBC Instruction (Internal Power)

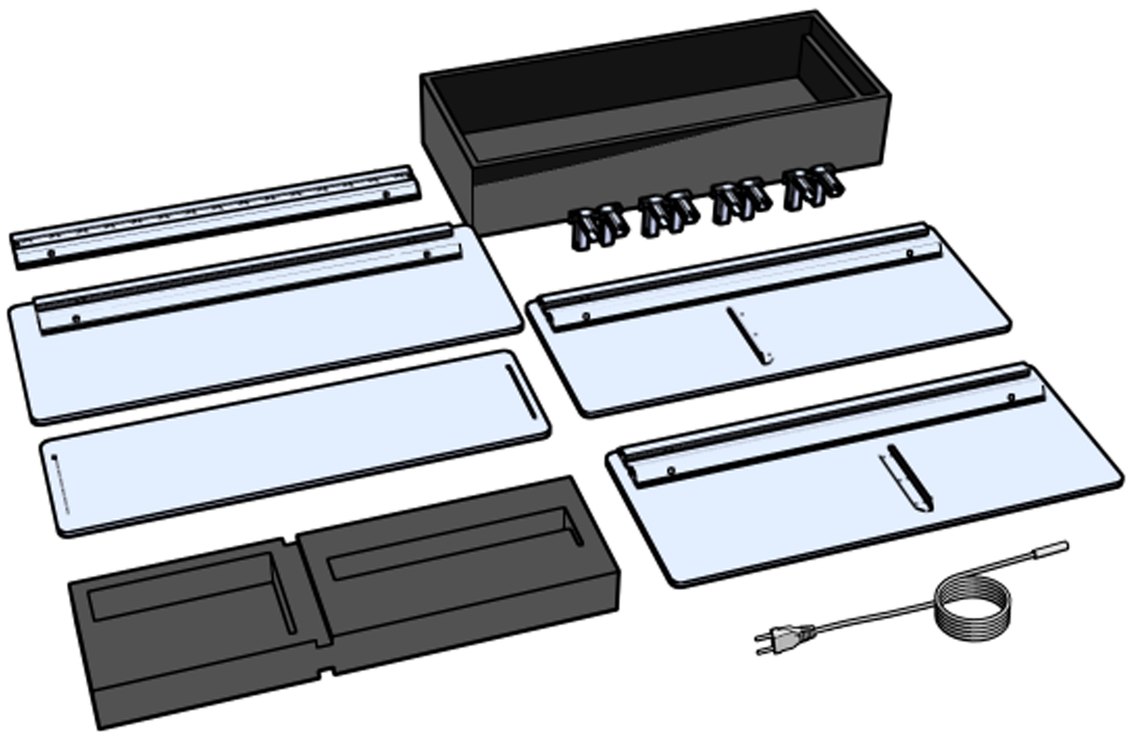

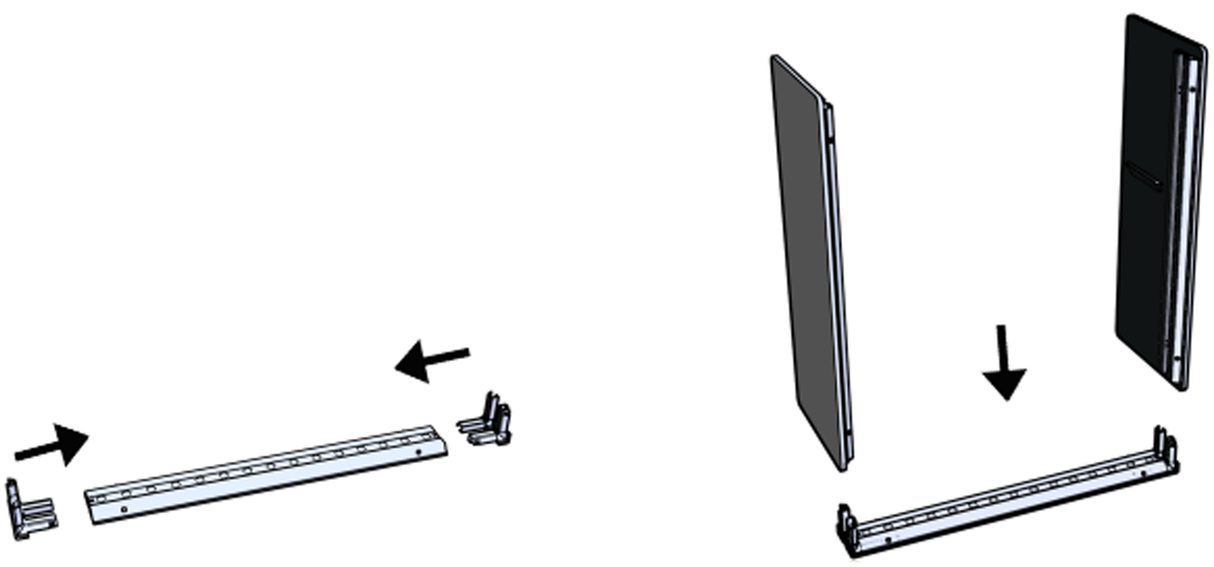

step1

step2

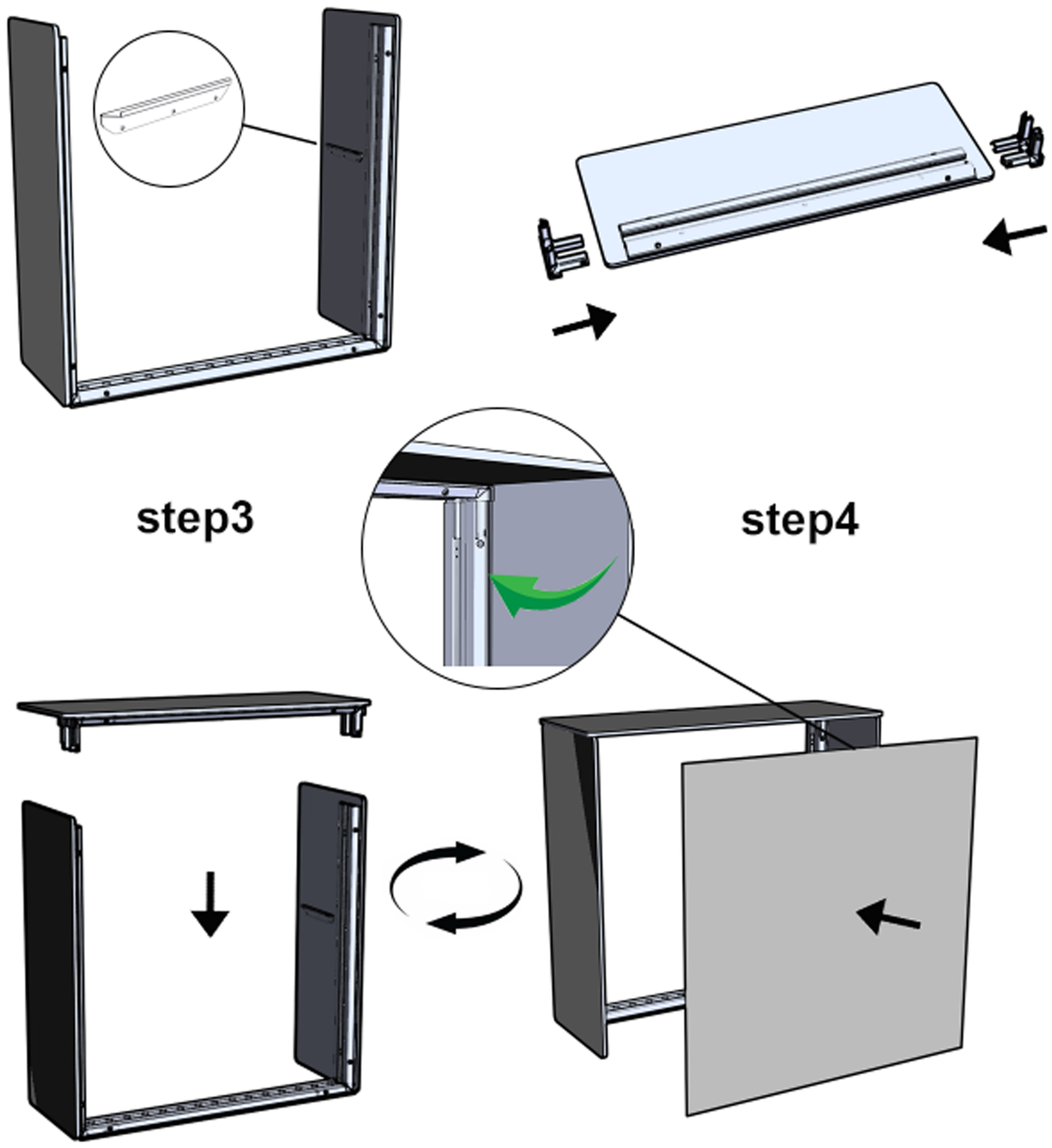

step3

step4

step5

step6

120mm SEG Storage Lightbox Counter R2 EM-08FBC Instruction (Internal Power)

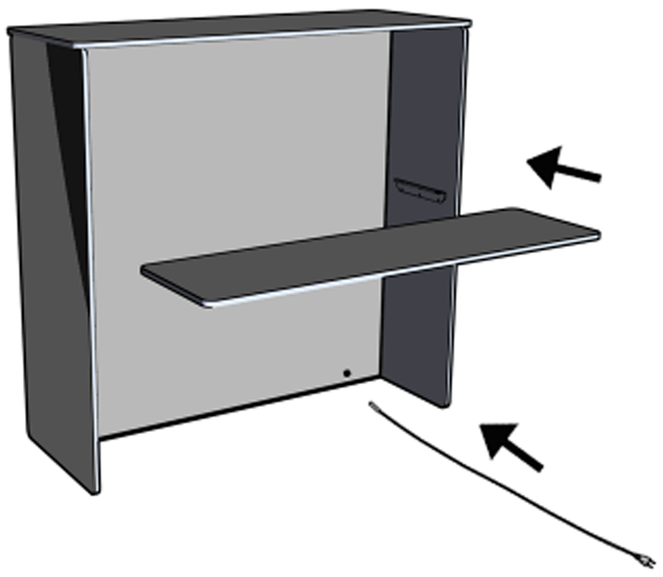

step7

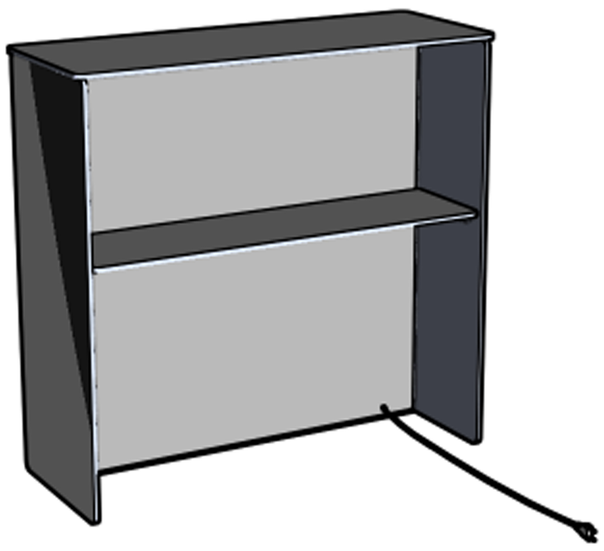

step8

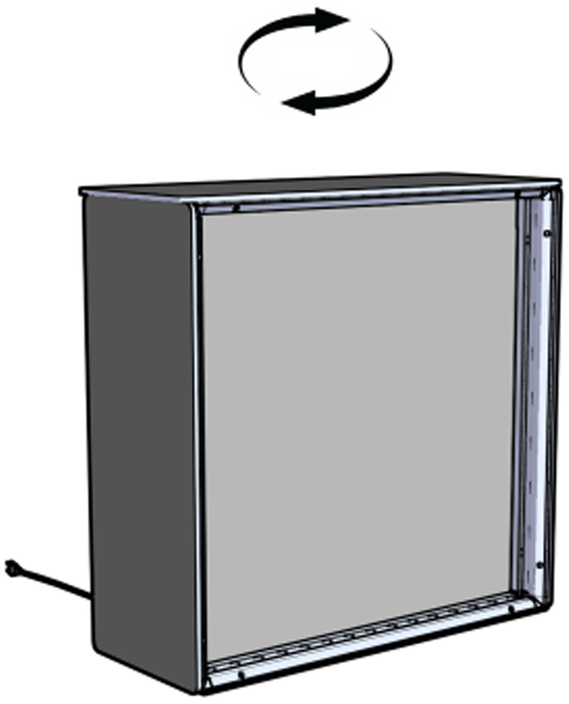

step9

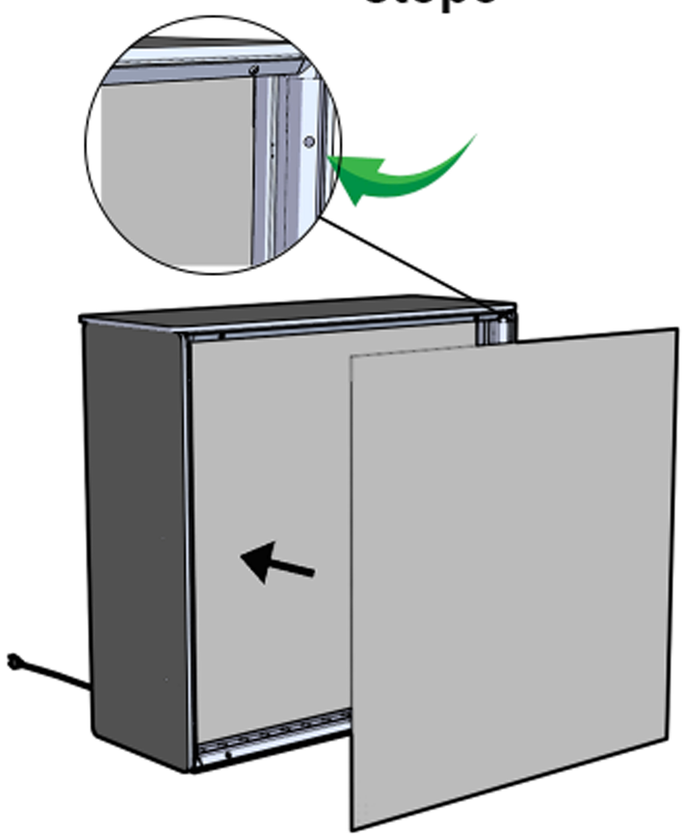

step10

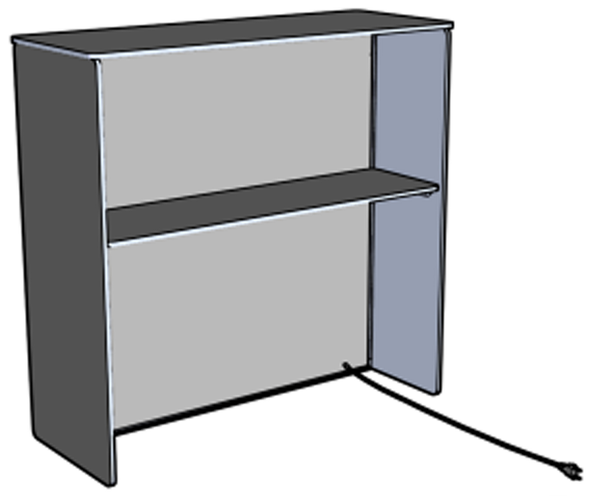

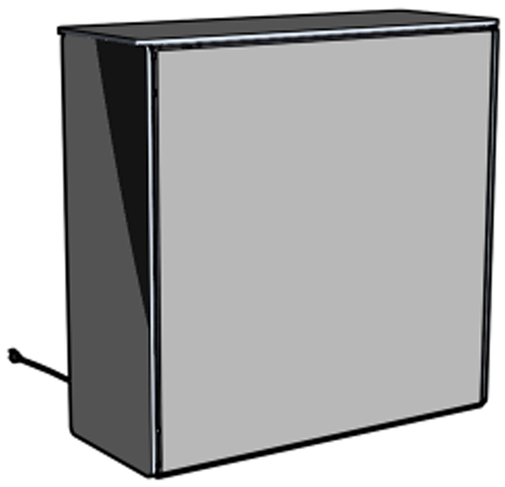

120mm SEG Storage Lightbox Counter R2 EM-08FBC Instruction (External Power)

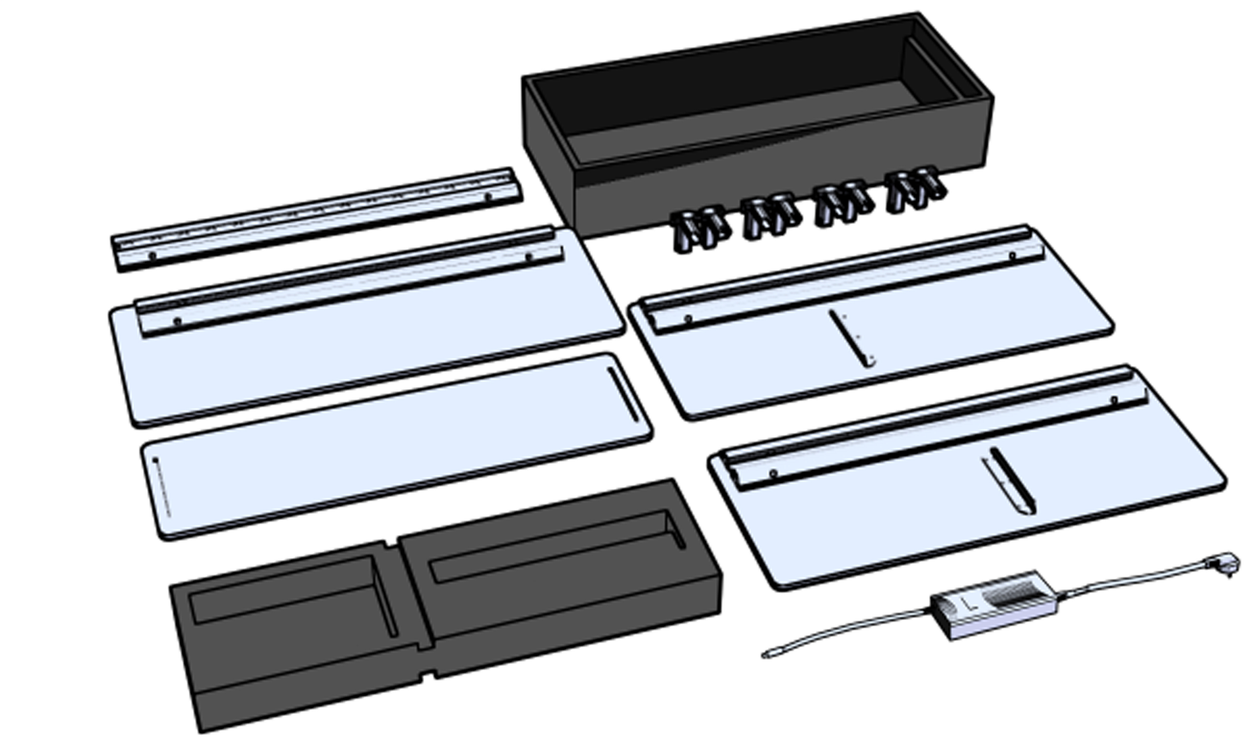

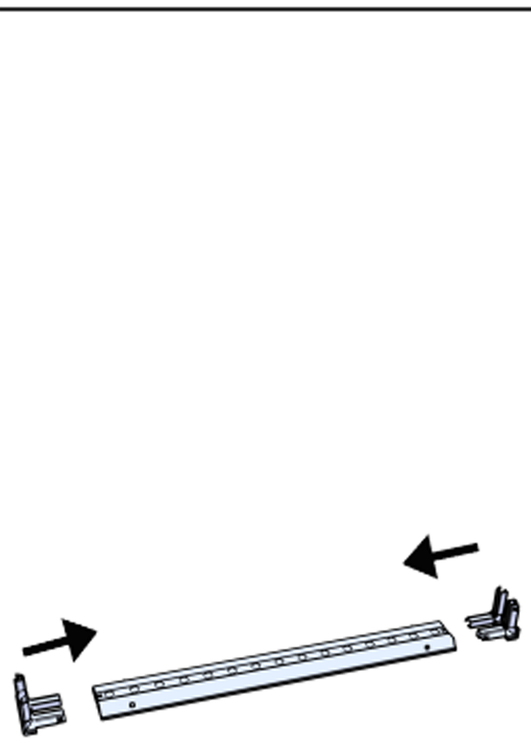

step1

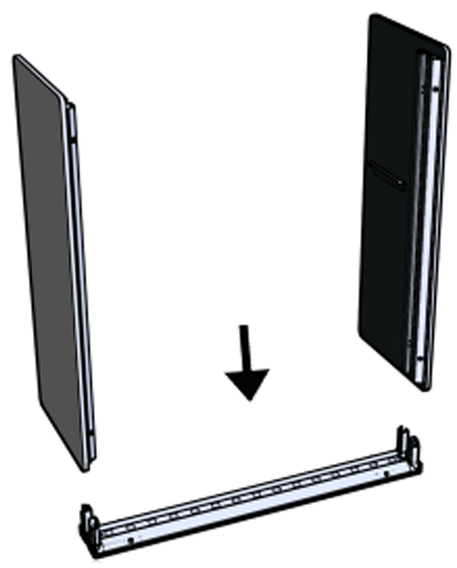

step2

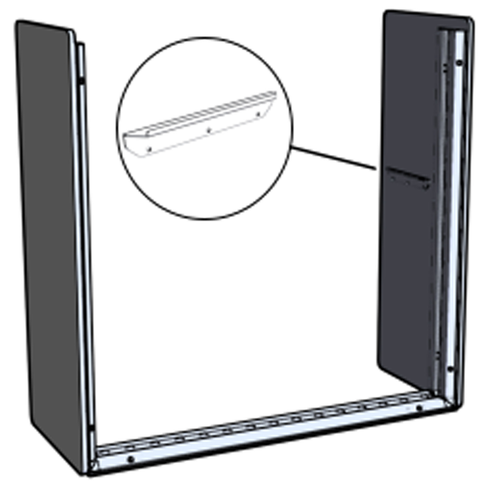

step3

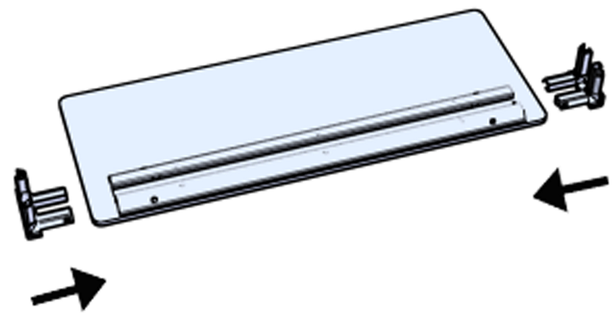

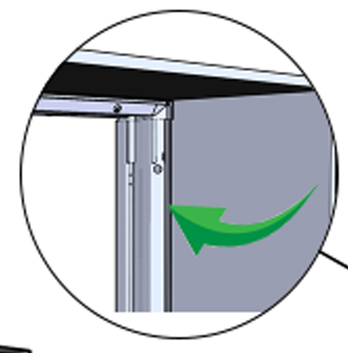

step4

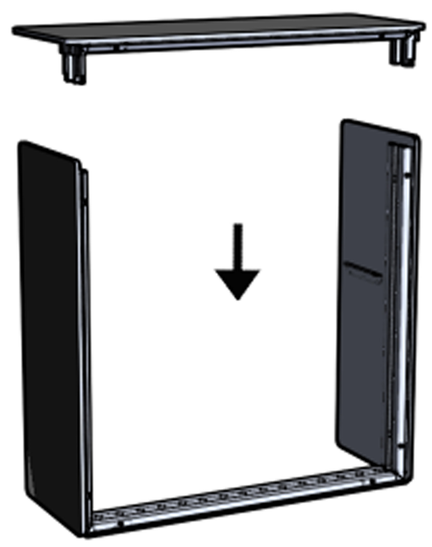

step5

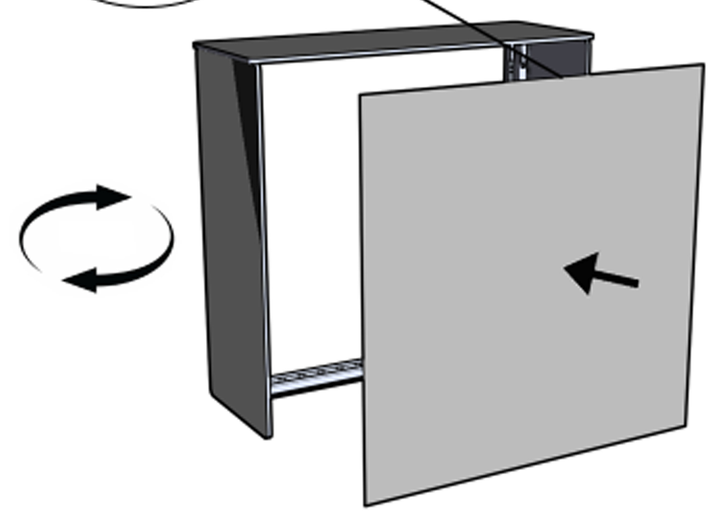

step6

120mm SEG Storage Lightbox Counter R2 EM-08FBC Instruction (External Power)

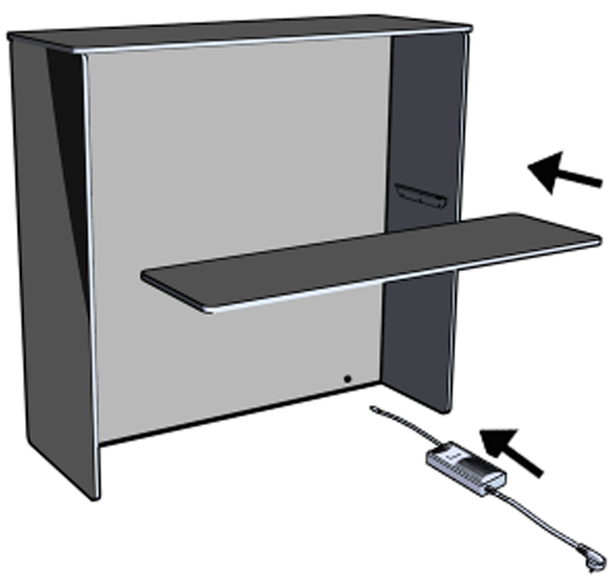

step7

step8

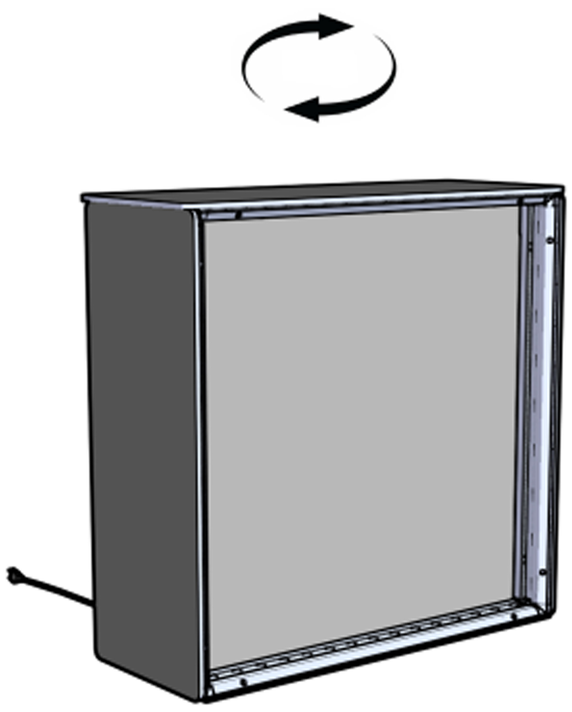

step9

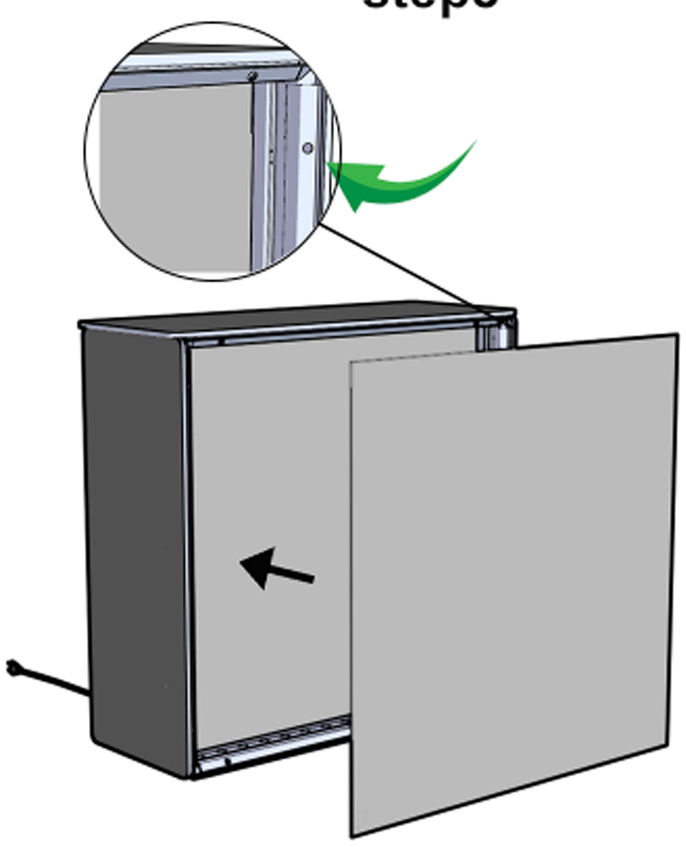
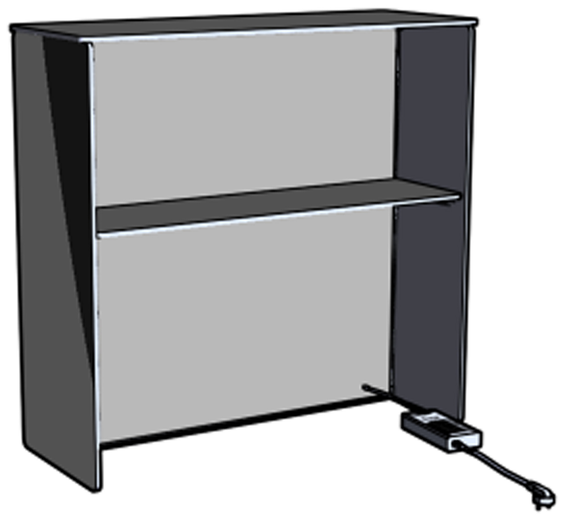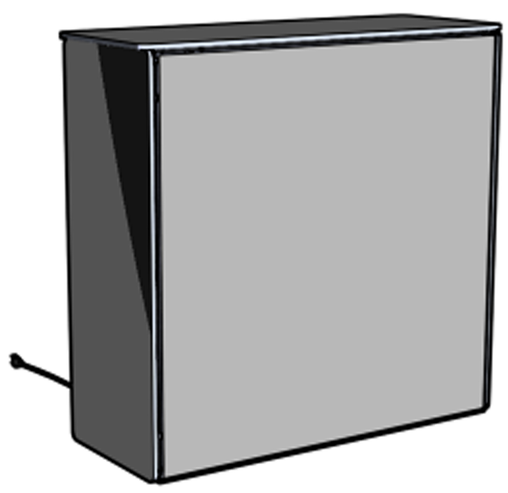
step10